mechanics

Ball Screw Feed Axis

LES 5
(LF 5)

LES 5 with integrated drive module

Features

- aluminium shaft profile W 225 x H 75 mm, anodized
- clamping surface and profile bottom side plan-milled
- 4 precision steel shafts Ø 12 h6, material Cf53, hardness 60 ± 2 HRC
- aluminium slide blocks WS 5/70, 2 x WS 5/70 (70 mm long), adjustable free of clearance, central lubrication
- ball screw pitch 2.5/4/5/10/20 mm
- profile sealing by abrasion-resistant sealing lips
- aluminium die-cast end plates
- 2 limit and/or reference switches, repeatability ± 0.02 mm
- driving steel collar with sealed angular contact ball bearings

Order Key

234 XXX 0XXX

Profile Length
e.g. 029 = 290 mm (min.)
299 = 2990 mm (max.)
(shortened by the last digit)
Possibility to order standard length with 100 mm-grid space

Ballscrew feed drive
0 = without
1 = pitch 2.5 mm
2 = pitch 4.0 mm
3 = pitch 5.0 mm
4 = pitch 10 mm
5 = pitch 20 mm

Motor
3 = preparation direct drive module
4 = preparation belt drive module

Shaft Slide Block
0 = 2 shaft slide block 70 mm
2 = 4 shaft slide blocks 70 mm

Options
- black aluminium profile, powder-coated
- electromagnetic brake
- steel slide block LS2 Item-No.051000 0000
- assembly kit for limit switch (see Accessories)

Drive Modules

Preparation - Direct Drive

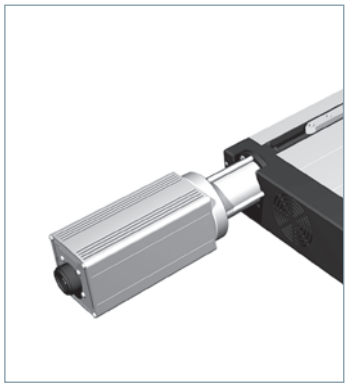

Direct Drive Module 1

Nominal Torques

Nominal torques (Ncm)					
Revolutions (1/min)	Spindle pitch				
	2.5	4	5	10	20
500	15	15	16	17	18
1,500	19	19	19	20	21
3,000	23	24	24	25	26

Technical Data

Aluminium Profiles

Aluminium profiles LES 5	
Moment of inertia I_x	2361.654 cm^4
Moment of inertia I_y	298.925 cm^4
*Centre of gravity see scale drawing	33.39 mm
Cross section surface	42.49 cm^2
Material	AlMgSiO, 5F22
Anodization	E6/EV1
Weight with steel shafts	13.8 kg/m
Weight with steel shafts and spindle	15.2 kg/m

Ball Screw Feed Axis

LES 5
(LF 5)

Deflection

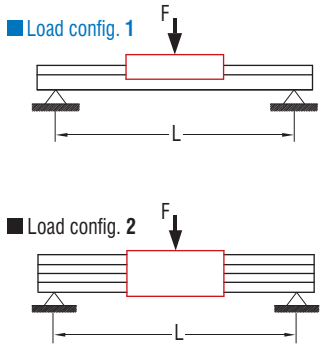

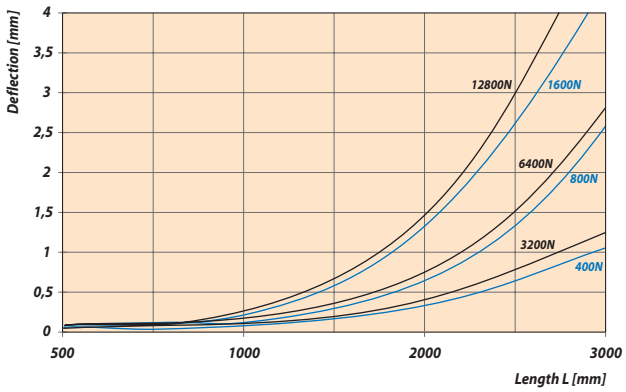

Travel range
at WS 5/70 = L1 -150 mm
at 2 x WS 5/70 = L1 -280 mm

Scale Drawing

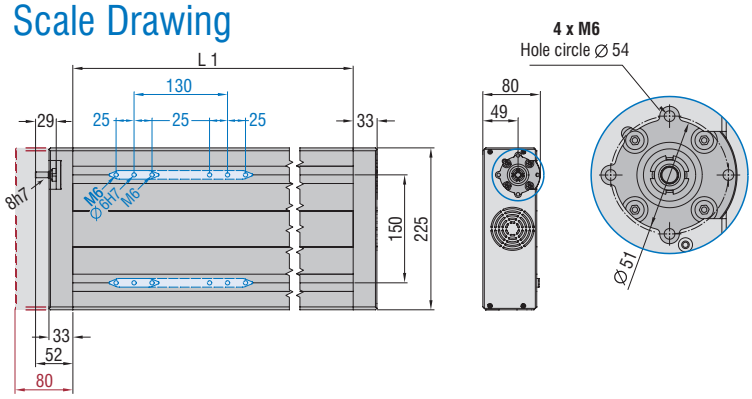
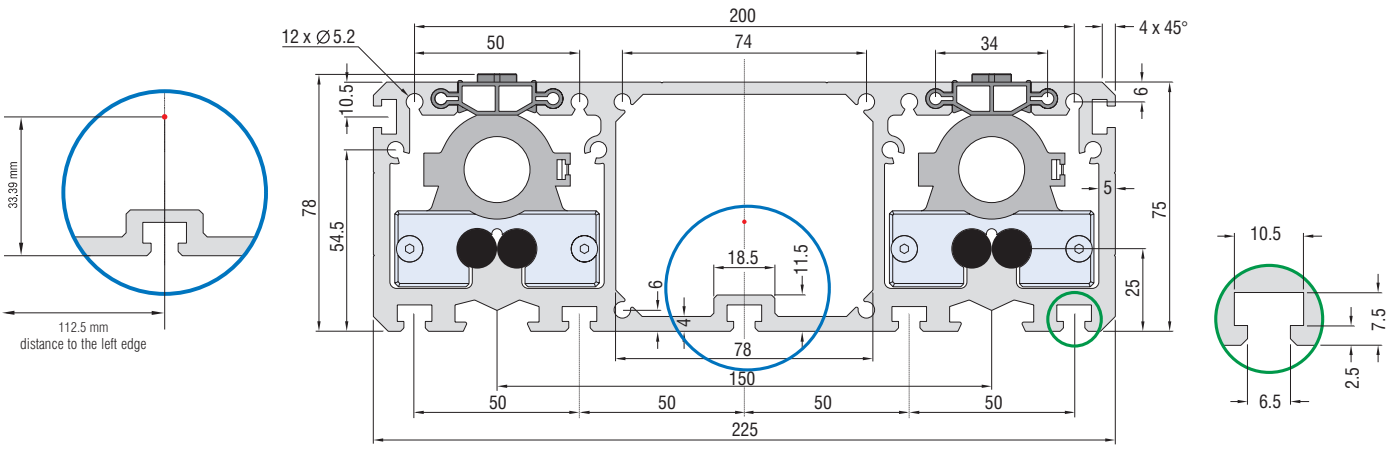
Scale Drawing
Aluminium Profile